Fundamentos Sistemas Digitais

Fundamentação

George Boole

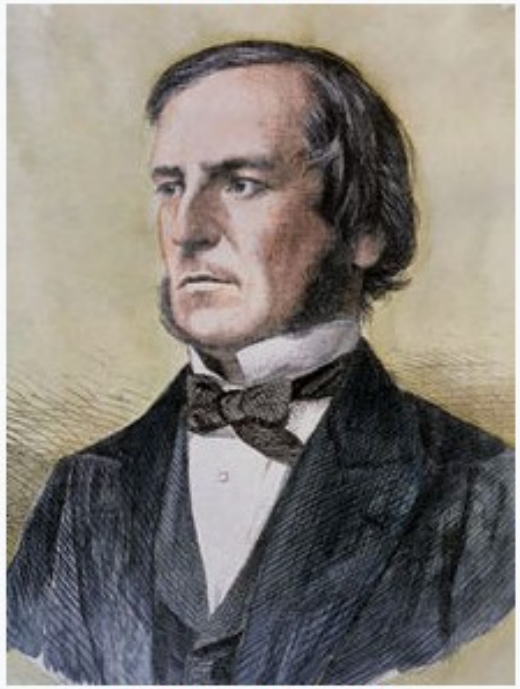

Boole in about 1860

$$x \wedge y = x \times y = \min(x, y)$$
$$x \vee y = x + y - (x \times y) = \max(x, y)$$
$$\neg x = 1 - x$$

x	y	$x \wedge y$	$x \vee y$
0	**0**	0	0
1	**0**	0	1
0	**1**	0	1
1	**1**	1	1

x	$\neg x$
0	1
1	0

Fundamentos de Sistemas Digitais

Aspectos Tecnológicos

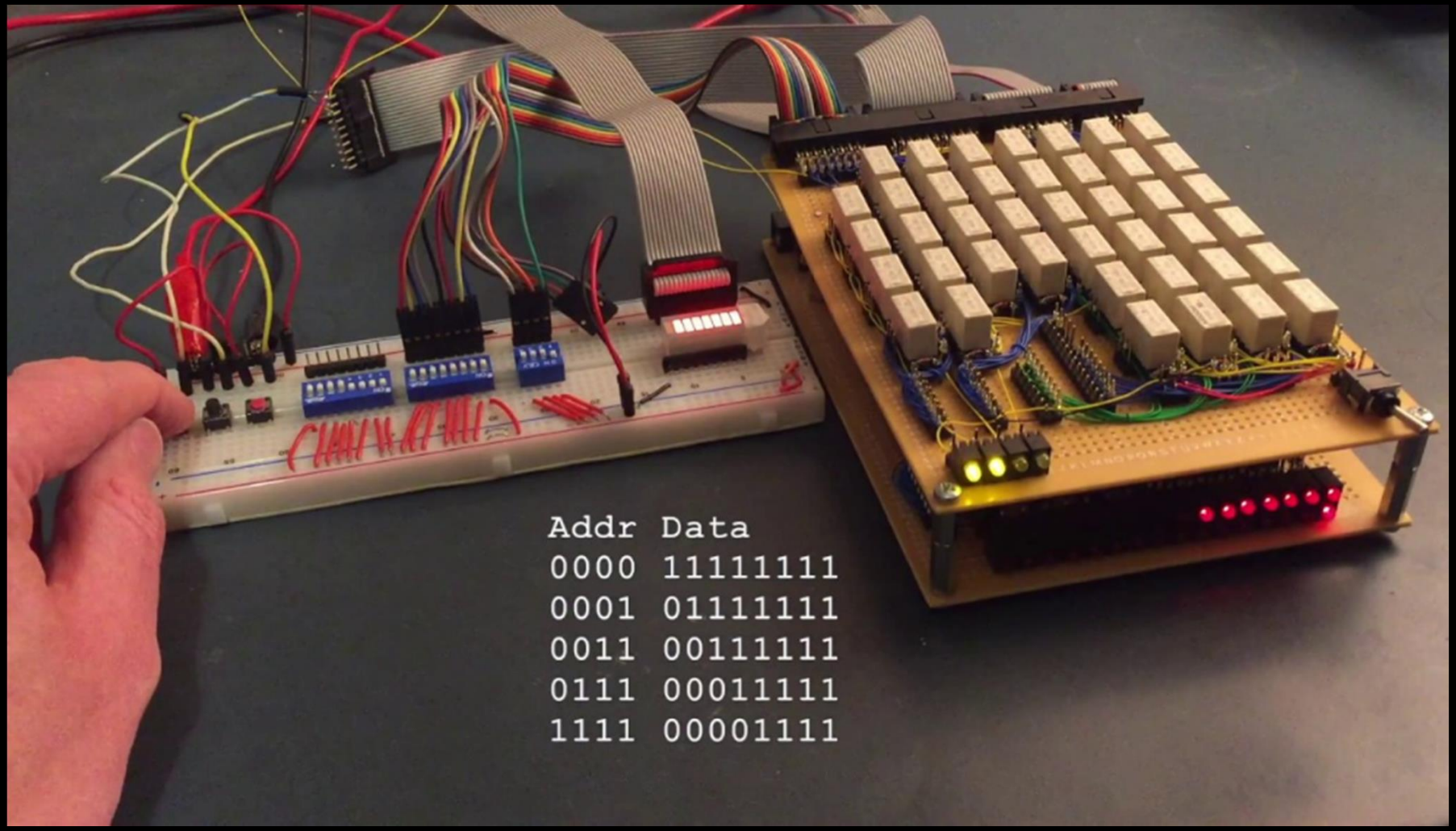

Fundamentos de Sistemas Digitais

Aspectos Tecnológicos

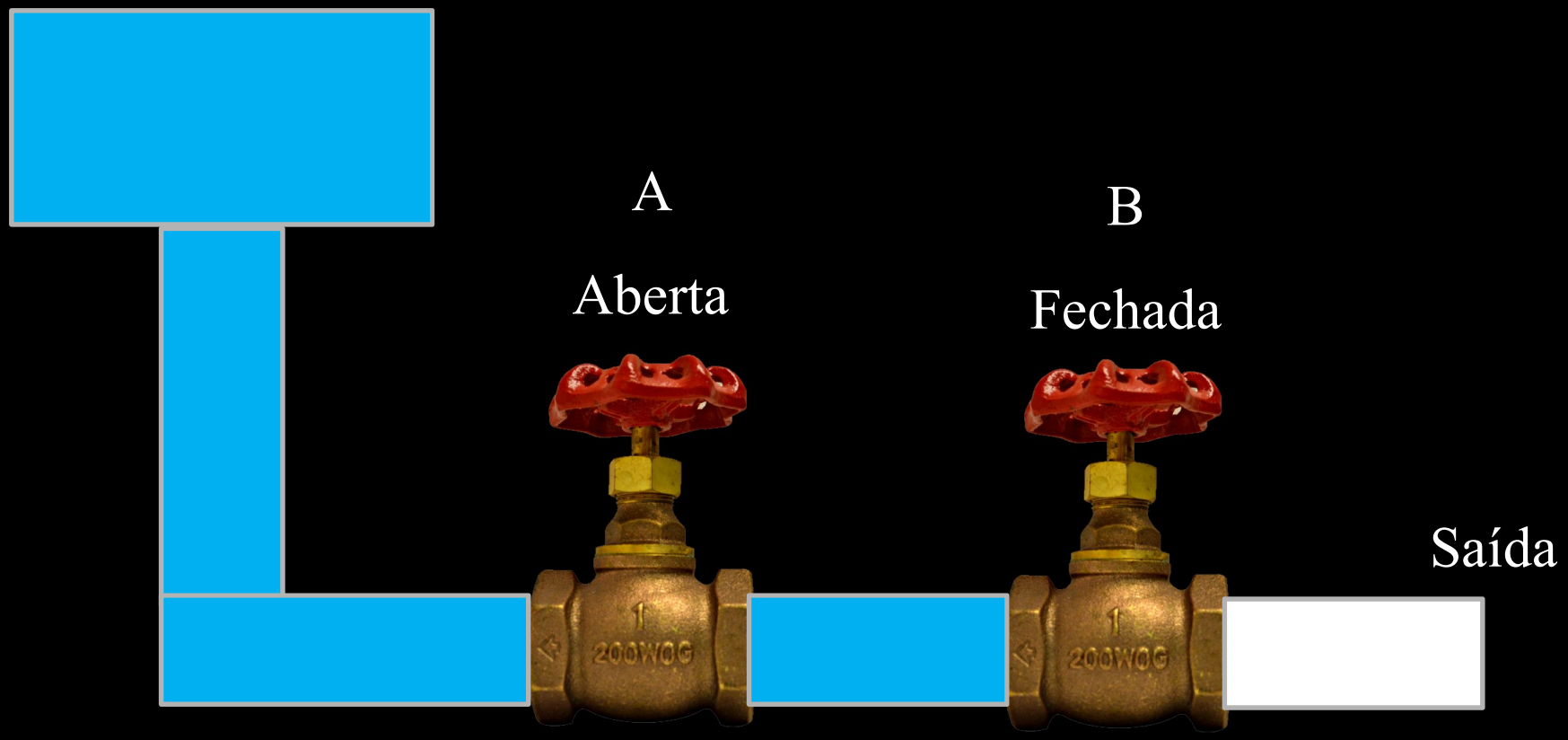

Fundamentos de Sistemas Digitais

Aspectos Tecnológicos

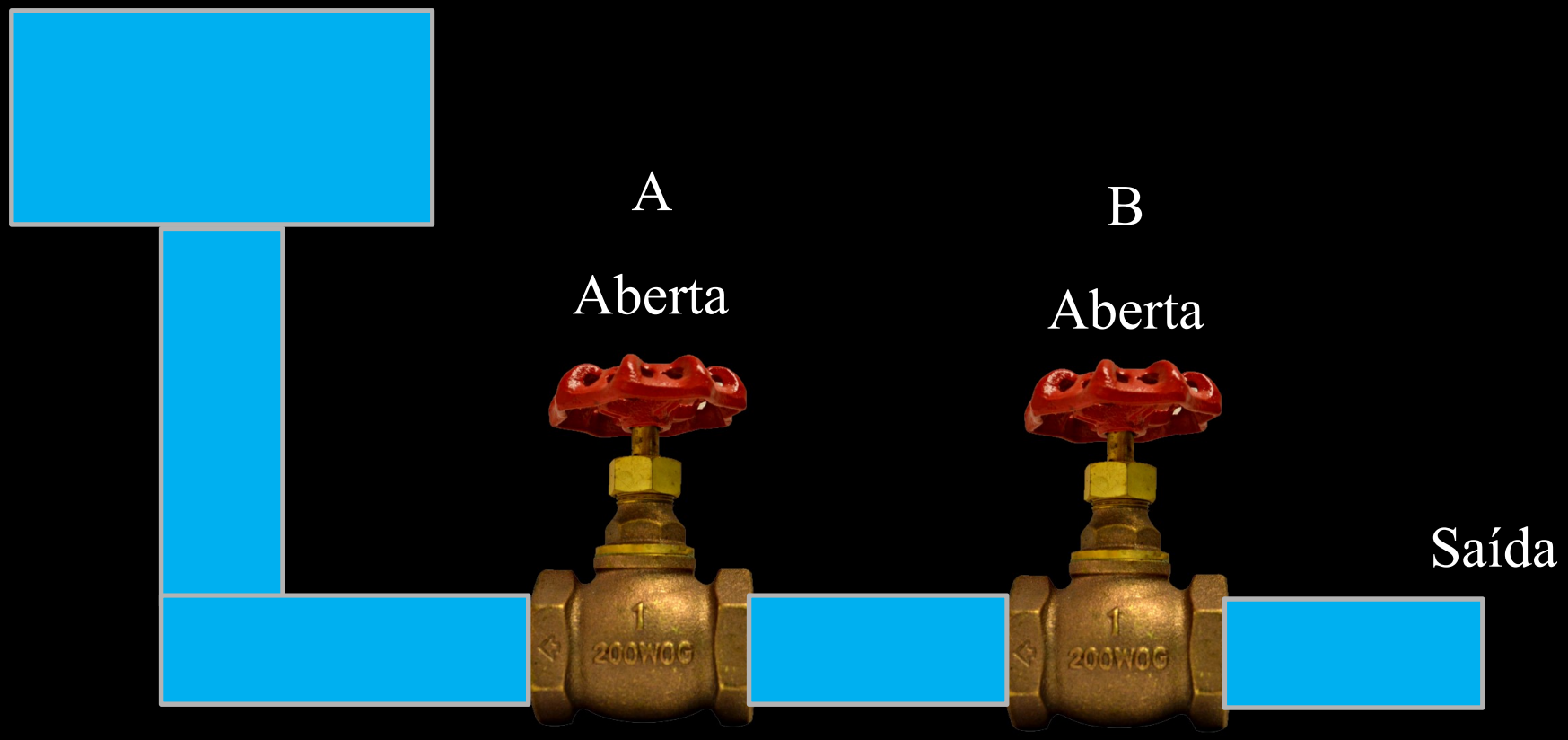

Fundamentos de Sistemas Digitais

Aspectos Tecnológicos

Aberta: 1

Fechada:0

E

A	B	Saída
0	0	0
0	1	0
1	0	0
1	1	1

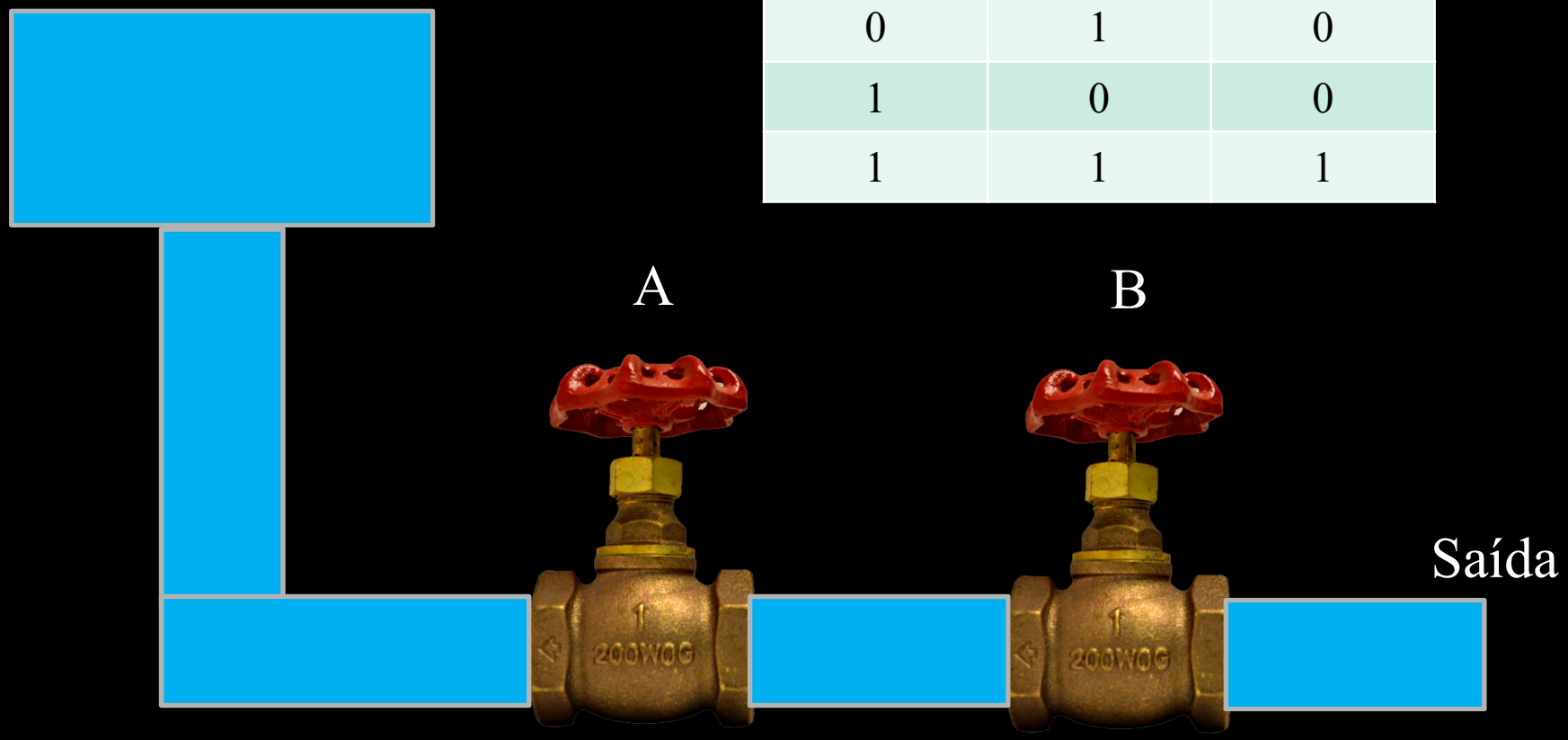

Fundamentos de Sistemas Digitais

Aspectos Tecnológicos

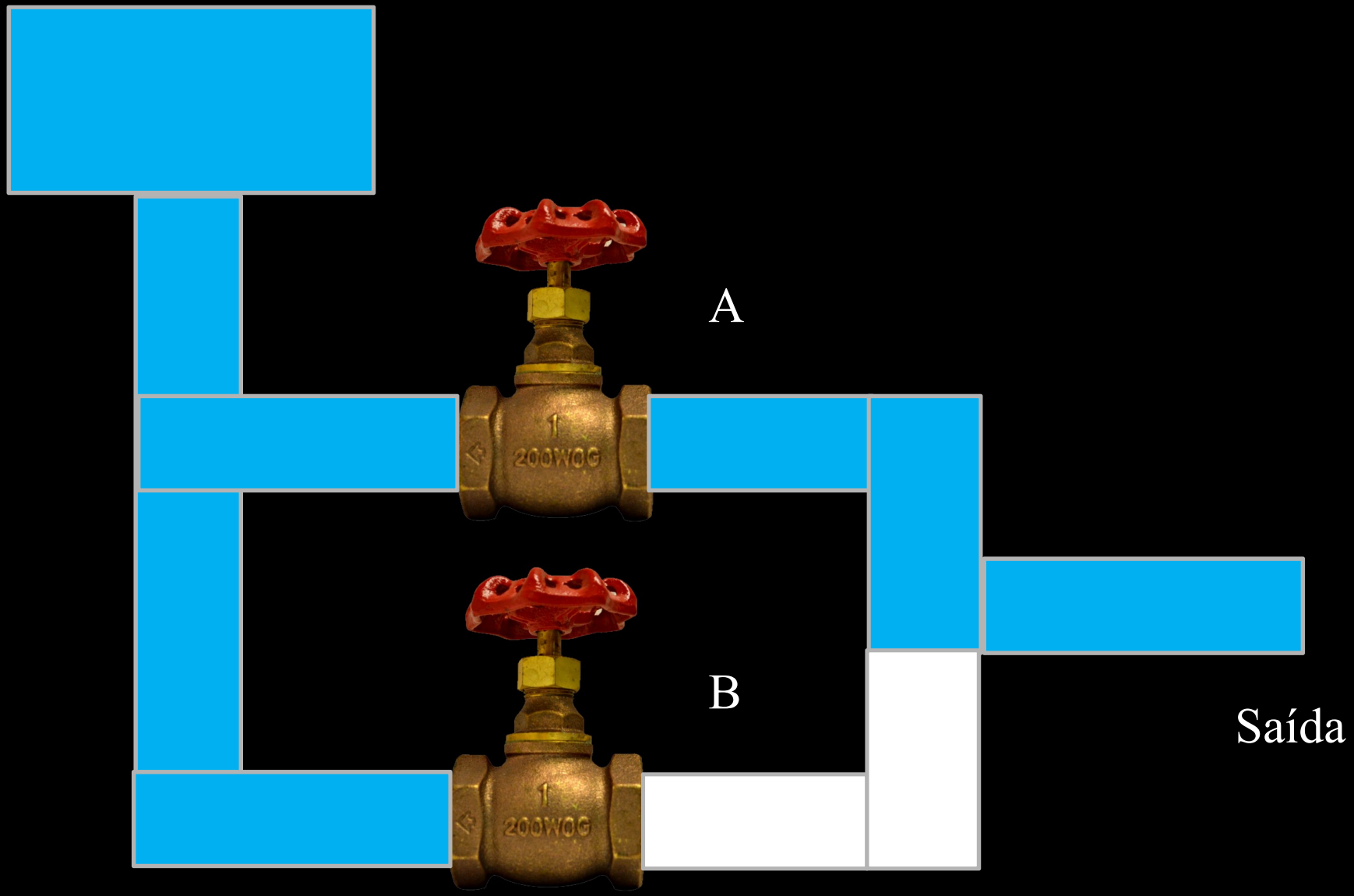

Fundamentos de Sistemas Digitais

Aspectos Tecnológicos

Aberta: 1

Fechada:0

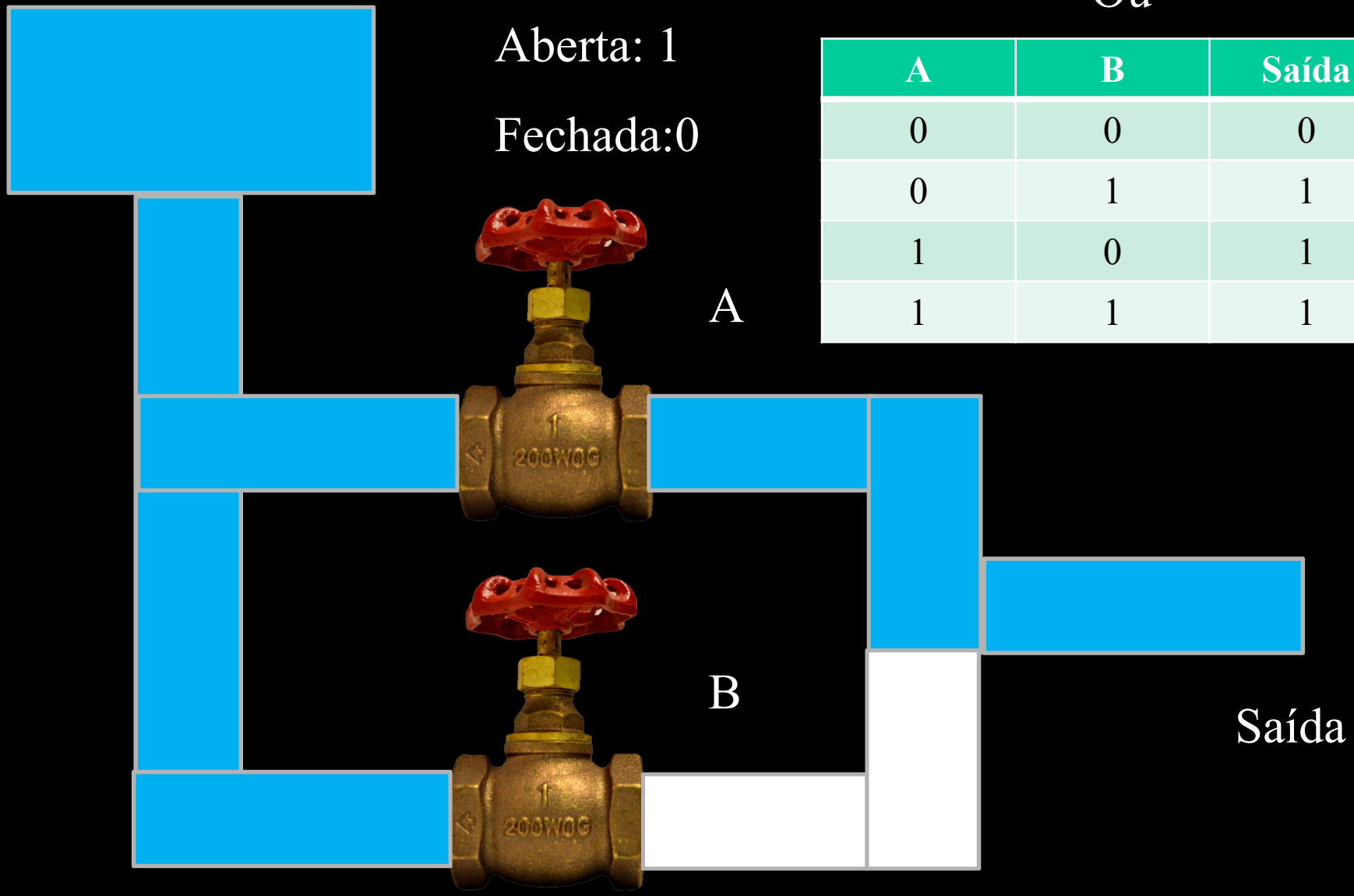

Ou

A	B	Saída
0	0	0
0	1	1
1	0	1
1	1	1

Aspectos Tecnológicos

Aberta: 1

Fechada:0

```
if (A || B)
{
}
```

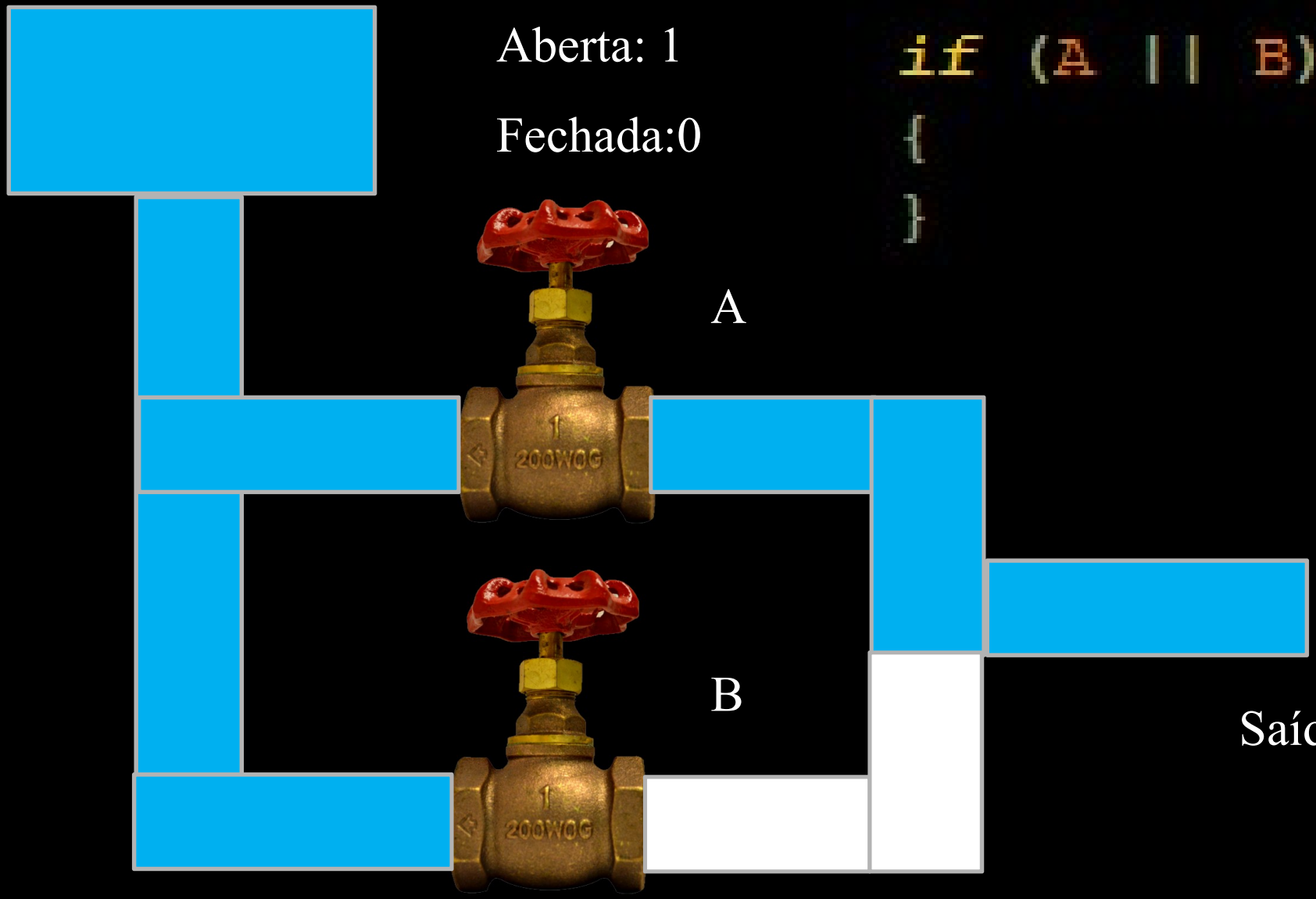

Aspectos Tecnológicos

Válvula Termiônica (início do século 20)

Aspectos Tecnológicos

Válvula Termiônica

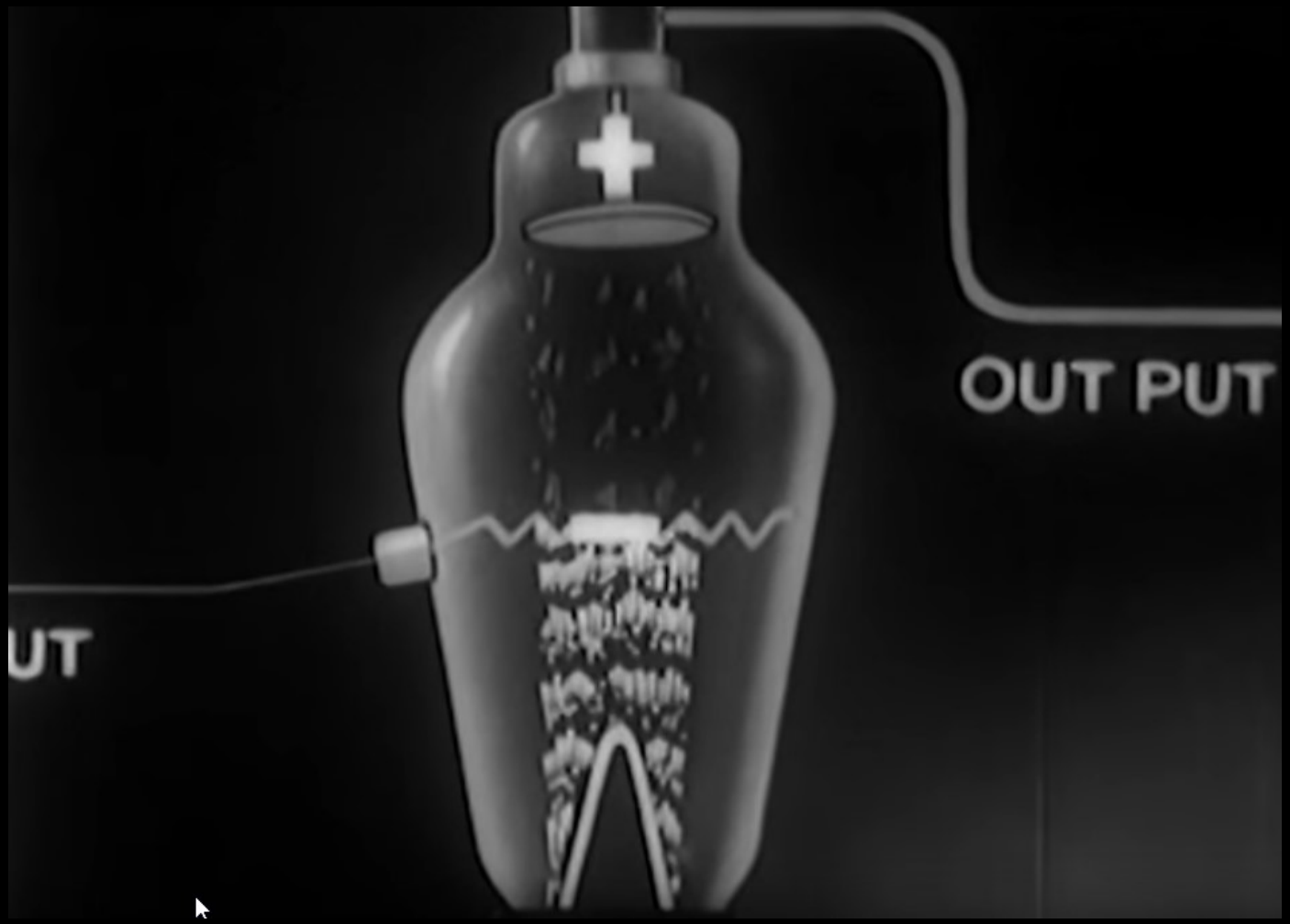

Aspectos Tecnológicos

Válvula Termiônica: Computador Eletrônico ENIAC (1940)

Aspectos Tecnológicos

Transistor (1947)

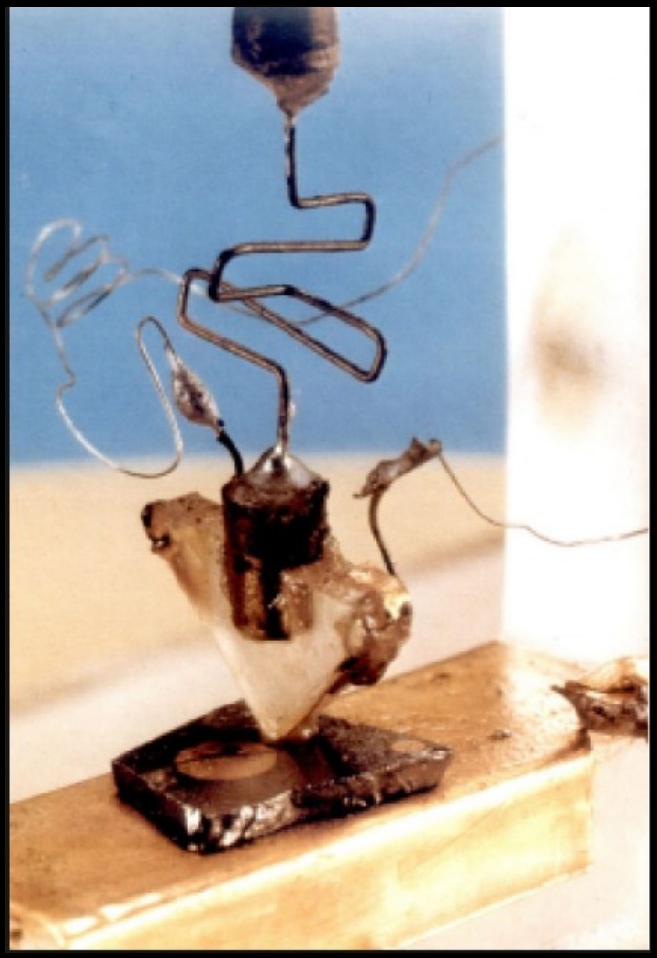

Aspectos Tecnológicos

Transistor (1947)

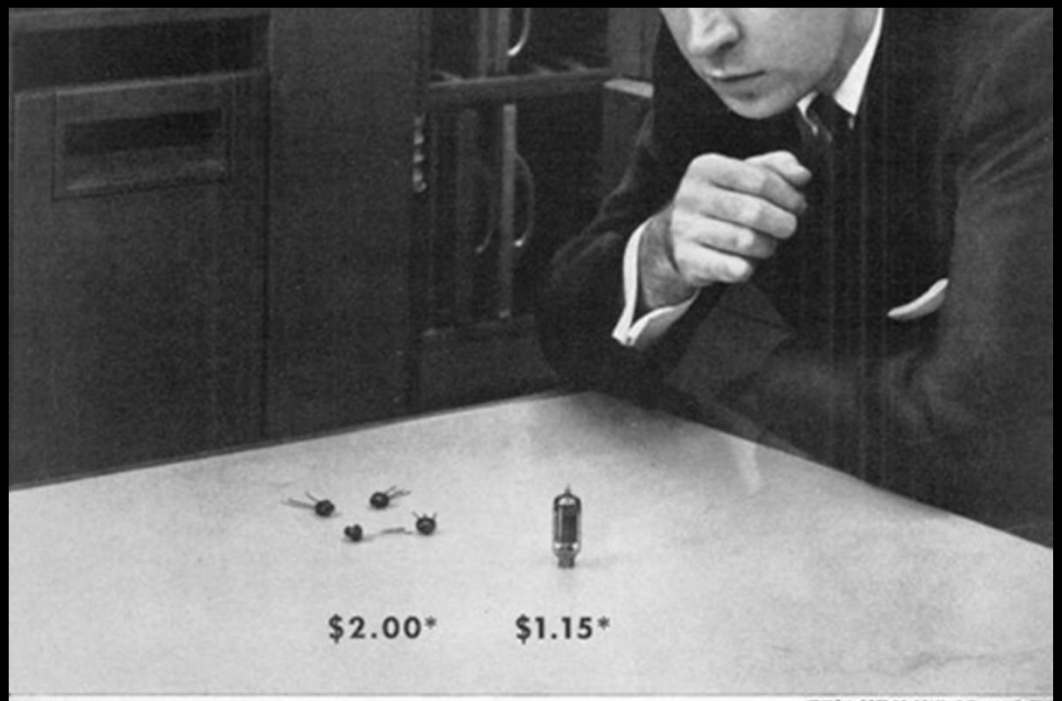

*TYPICAL COST TO EQUIPMENT MANUFACTUR

Must you pay the high price of miniaturization?

If you're in the market for an electronic computer or other electronic equipment, ask yourself this question: "Do I really need portability and ultimate compactness?" If you don't, why pay for them? A small reduction in computer size *can boost your initial cost as much as 100%.*

In a typical computer application, one electron tube, costing $1.15, performs the same functions as 3-5 solid-state devices priced at $2.00 or more. When you realize the number of components contained in an office-type computer, the high cost of excessive miniaturization is readily apparent. These savings are a direct multiple of the computer size and complexity.

Electron-tube equipment offers you even more significant savings from simpler circuitry, proven design, highest overload protection, and uniform operating characteristics over a wide range of temperatures. Field tests show that the over-all reliability of computers powered by electron tubes consistently exceeds the reliability of computers using solid-state devices. This means longer operation between shutdowns, and reduced maintenance costs.

When maintenance is necessary, standardized tube characteristics assure that equipment will meet original performance specifications without costly hand selection of replacement components. Down time is held to a minimum by the many convenient electron-tube sources of supply and by the ease of plug-in replacement.

Before you buy your next electronic equipment, investigate and compare all the advantages of electron-tube circuitry.

To help you in your evaluation, send for your free copy of the 62-page comparative study, "Electronic Devices and Their Capabilities."

To: General Electric Company, Room 7115A, Receiving Tube Department, Owensboro, Kentucky

Progress Is Our Most Important Product

GENERAL ELECTRIC

Aspectos Tecnológicos

Transistor – Dispositivo de chaveamento

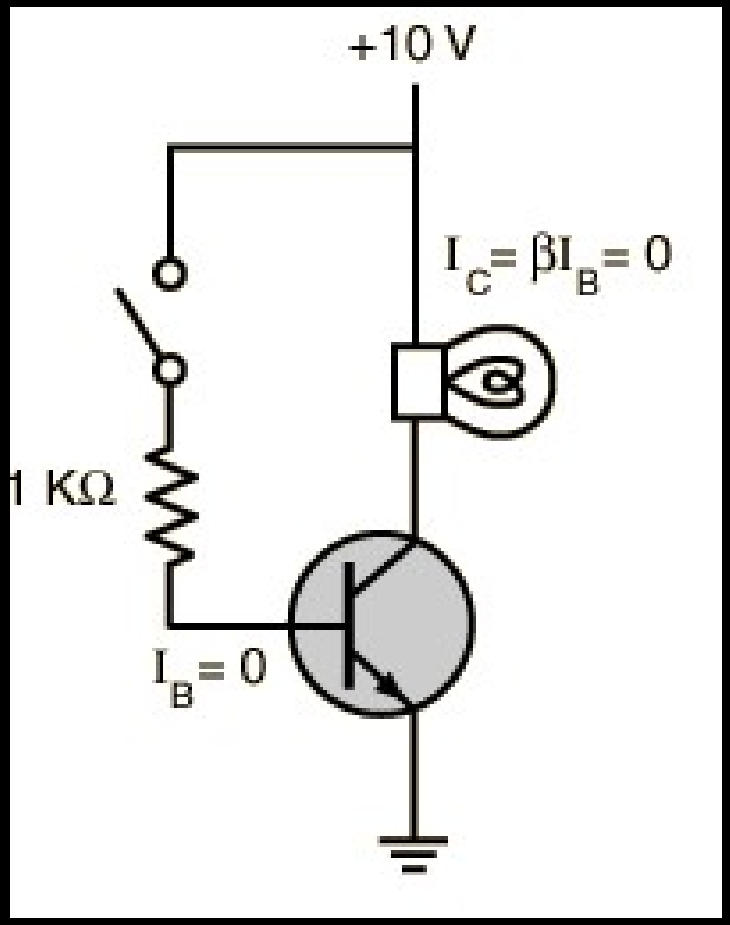

Aspectos Tecnológicos

Transistor – Dispositivo de chaveamento

Tecnologia Atual

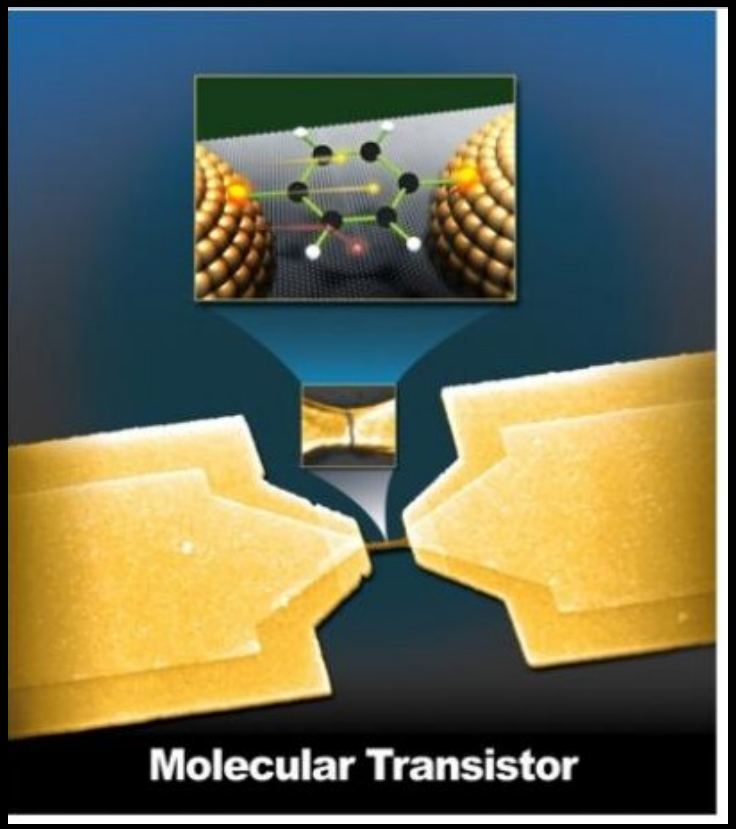

Motivações:

Fronteiras entre hardware e software:

Quanto de software: ?

Quanto de hardware: ?

Metodologia de desenvolvimento

Transistores

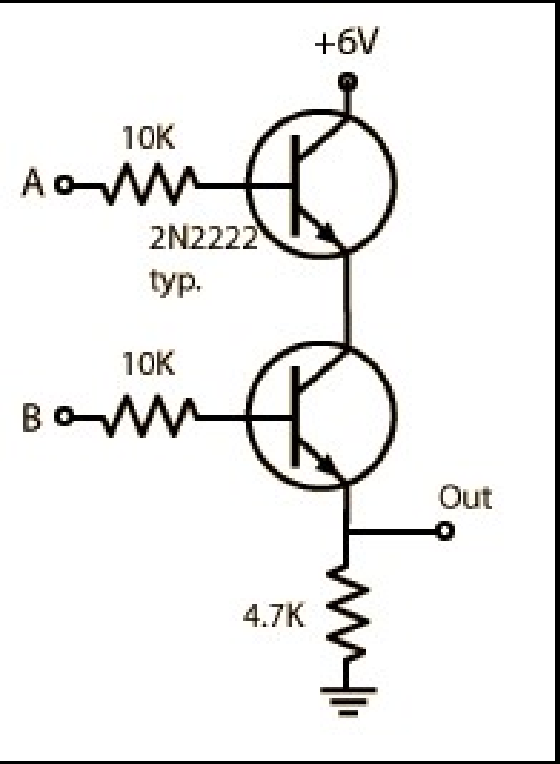

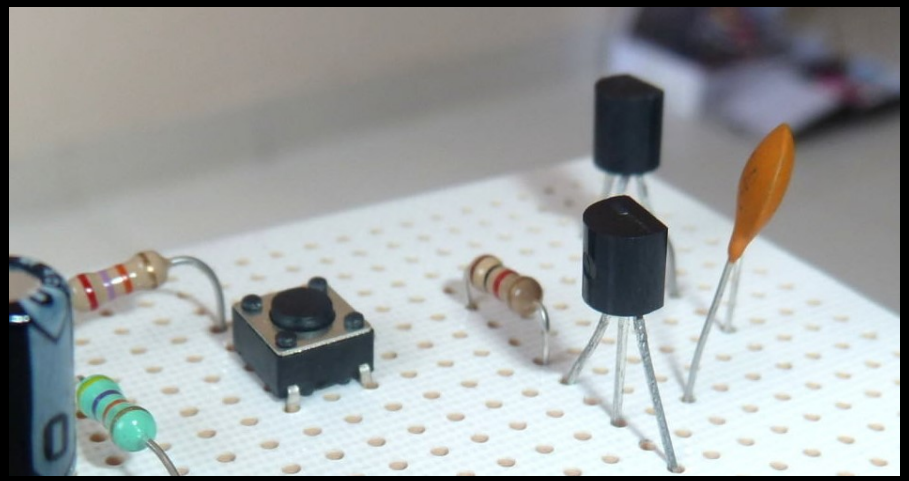

Metodologia de desenvolvimento

Circuitos Integrados de baixa integração

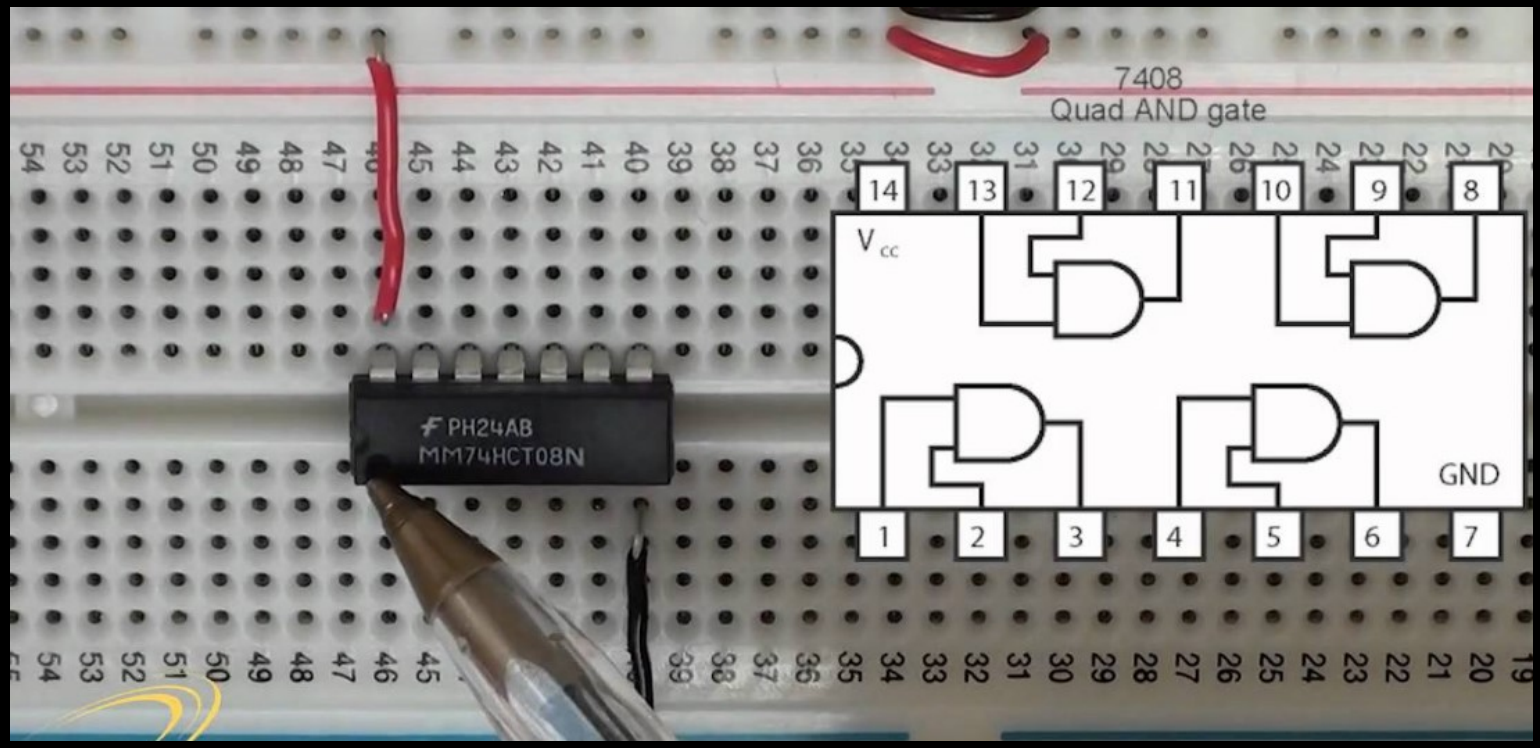

Metodologia de desenvolvimento

Circuitos Integrados de baixa integração

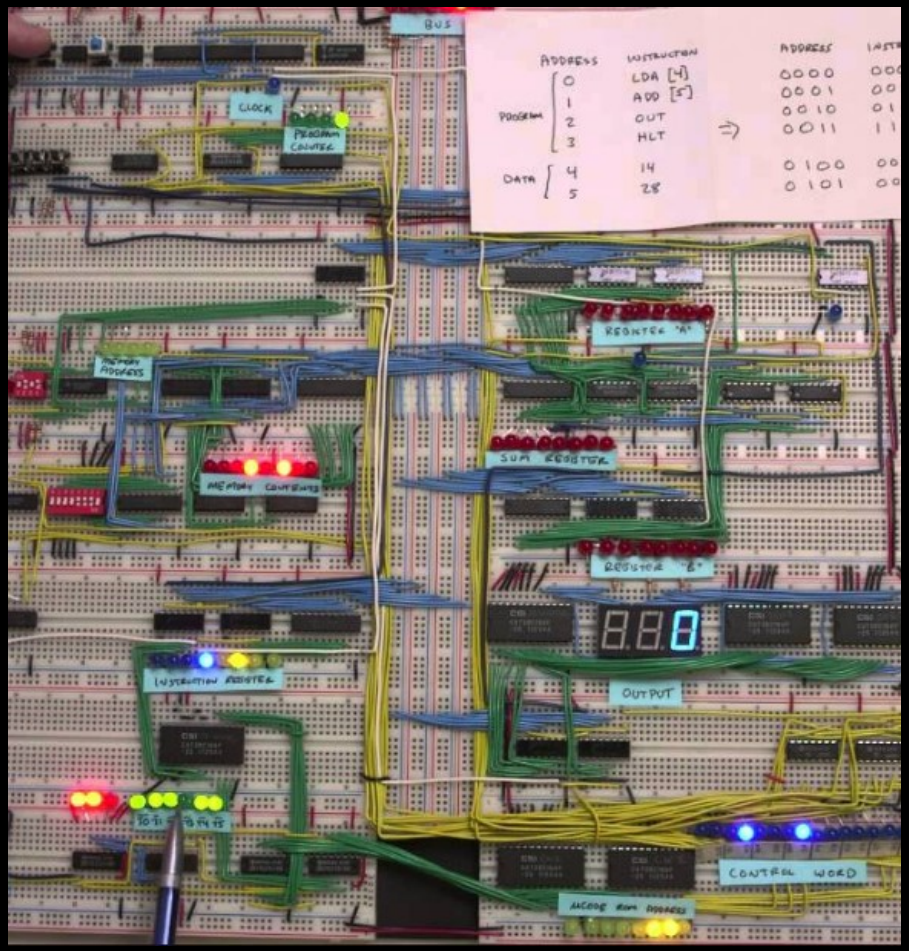

Metodologia de desenvolvimento

Circuitos Lógica Reconfigurável

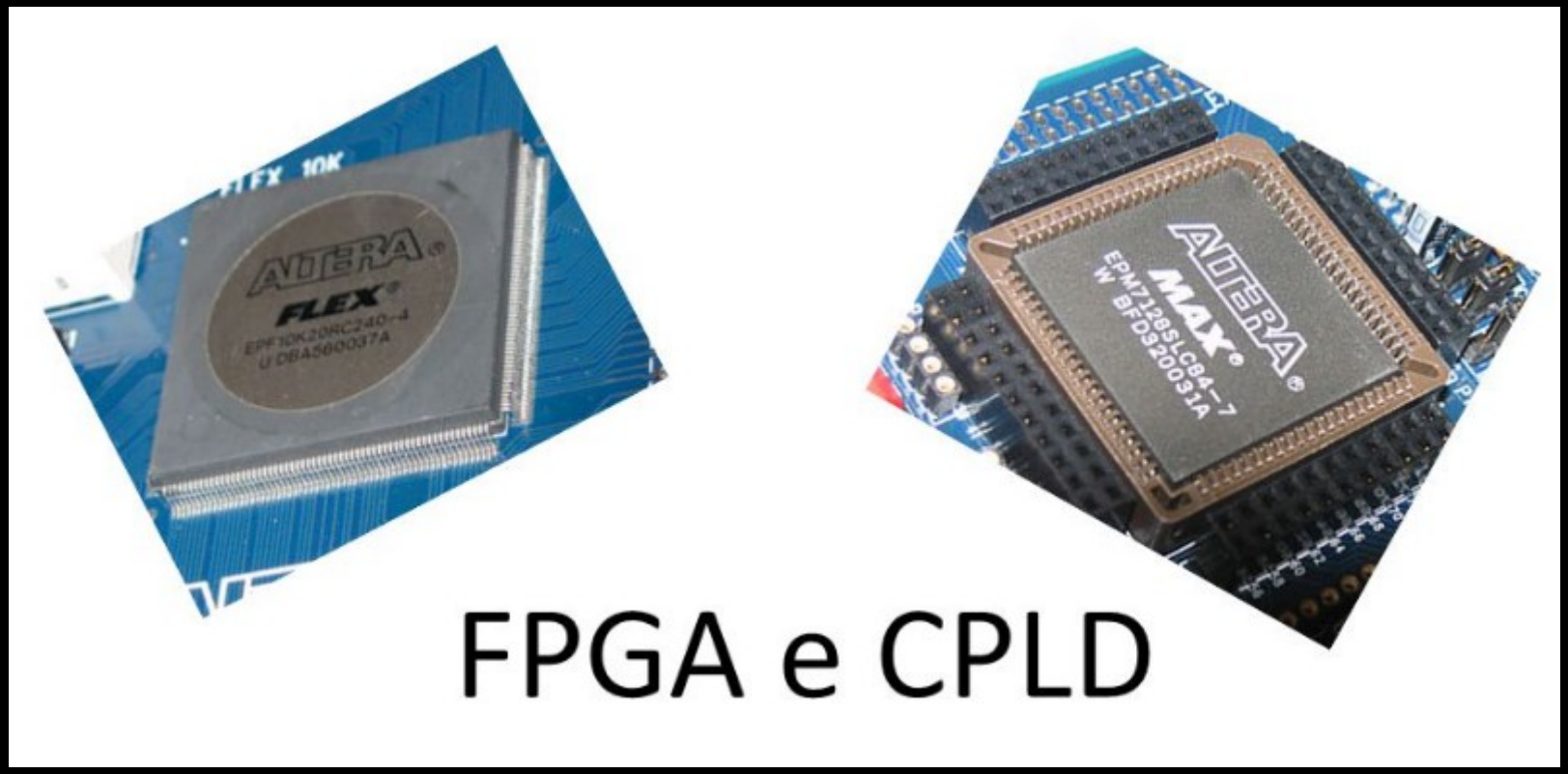

Metodologia de desenvolvimento

Circuitos Lógica Reconfigurável

CPLD (Complex Programmable Logic Device)

FPGA (Field Programmable Gate Array)

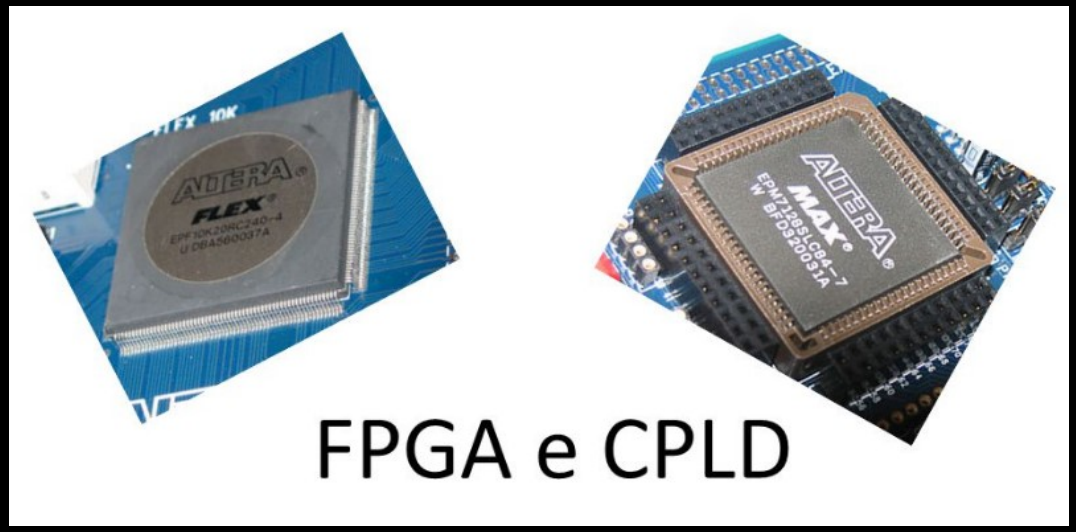

Metodologia de desenvolvimento

Circuitos Lógica Reconfigurável

Linguagem de Descrição de Hardware

- VHDL - VHSIC Hardware Description Language"
  VHSIC "Very High Speed Integrated Circuits“
- Verilog
- MyHDL - Python

Metodologia de desenvolvimento

Circuitos Lógica Reconfigurável

Linguagem de Descrição de Hardware

- VHDL

```
library IEEE;
use IEEE.STD_LOGIC_1164.ALL;

entity and_or_top is
    Port ( INA1 : in  STD_LOGIC;    -- AND gate input
           INA2 : in  STD_LOGIC;    -- AND gate input
           OA   : out STD_LOGIC;    -- AND gate output
end and_or_top;

architecture Behavioral of and_or_top is
begin
    OA <= INA1 and INA2;    -- 2 input AND gate
end Behavioral;
```

Metodologia de desenvolvimento

Circuitos Lógica Reconfigurável

Linguagem de Descrição de Hardware

- VHDL

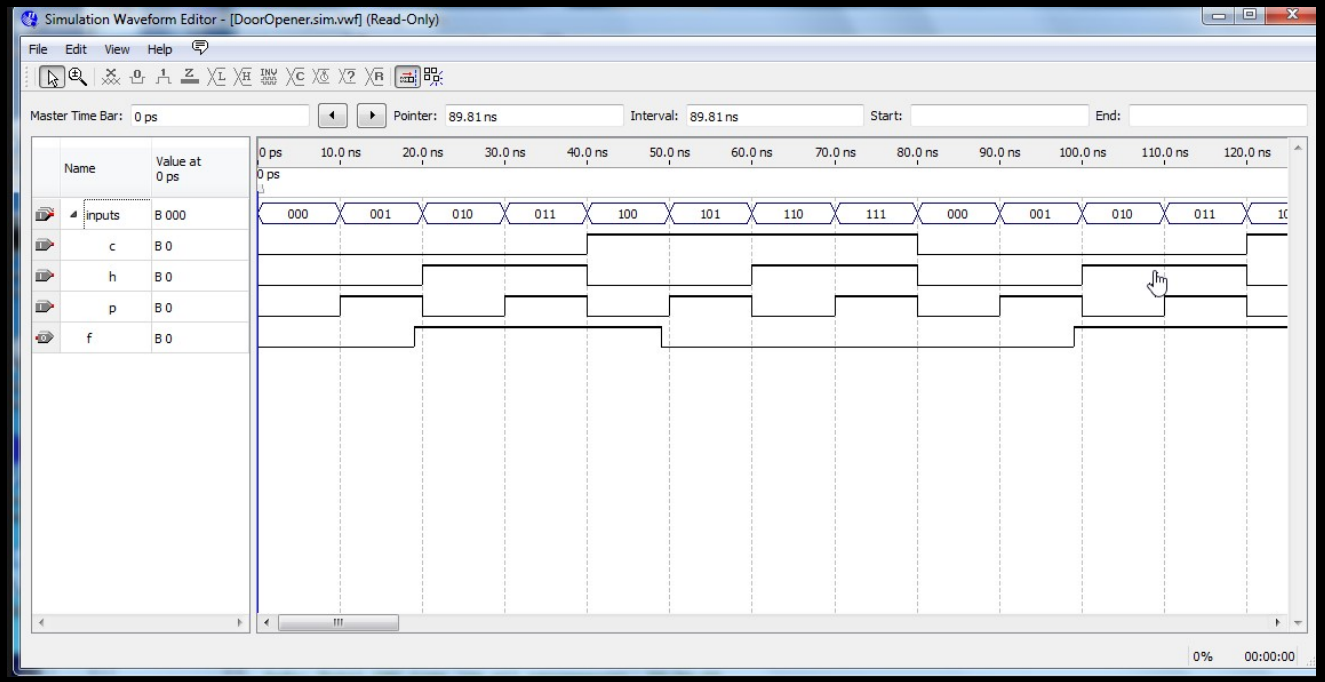

Hardware FPGA –DE2

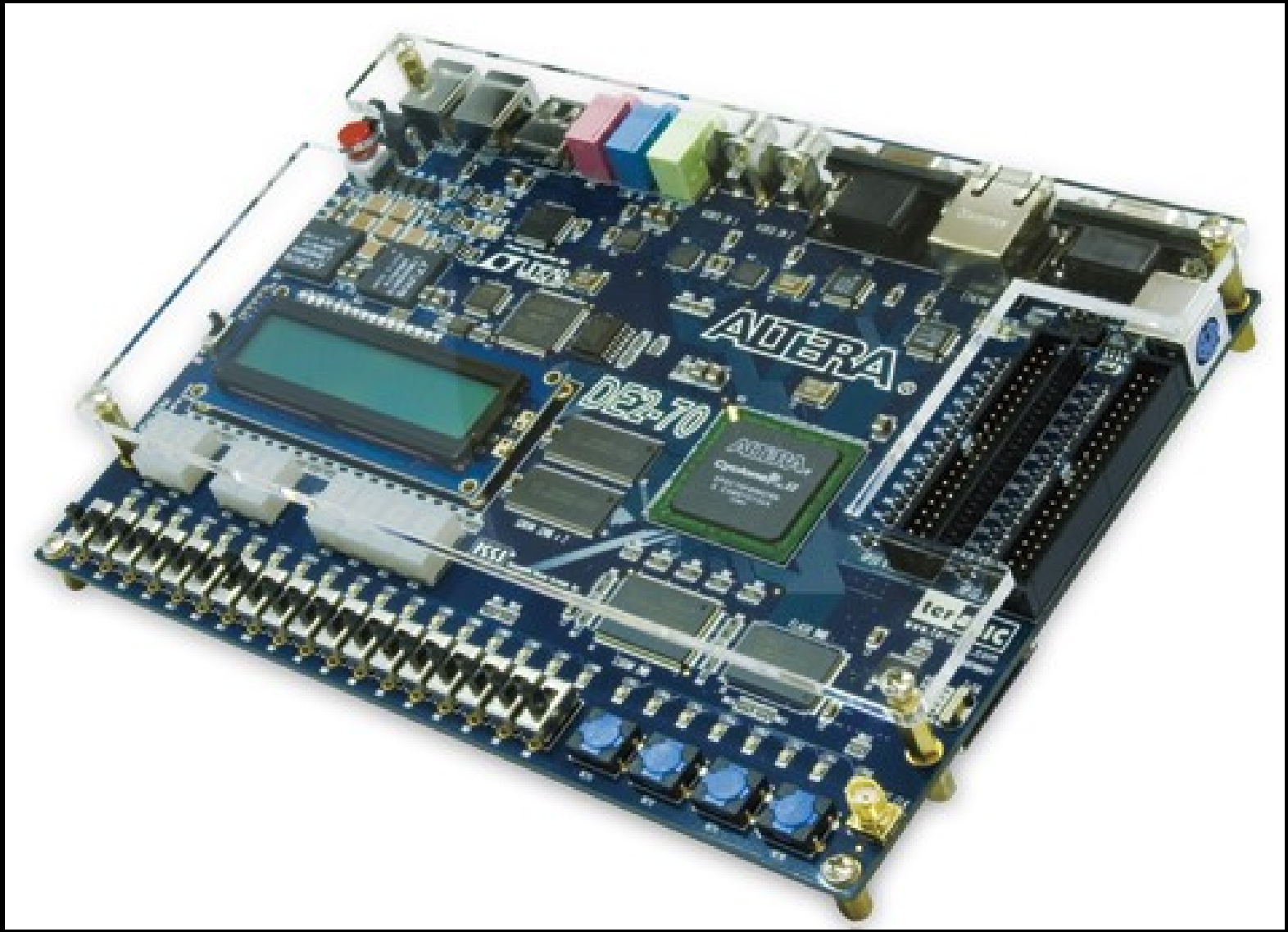

Hardware FPGA –DE2

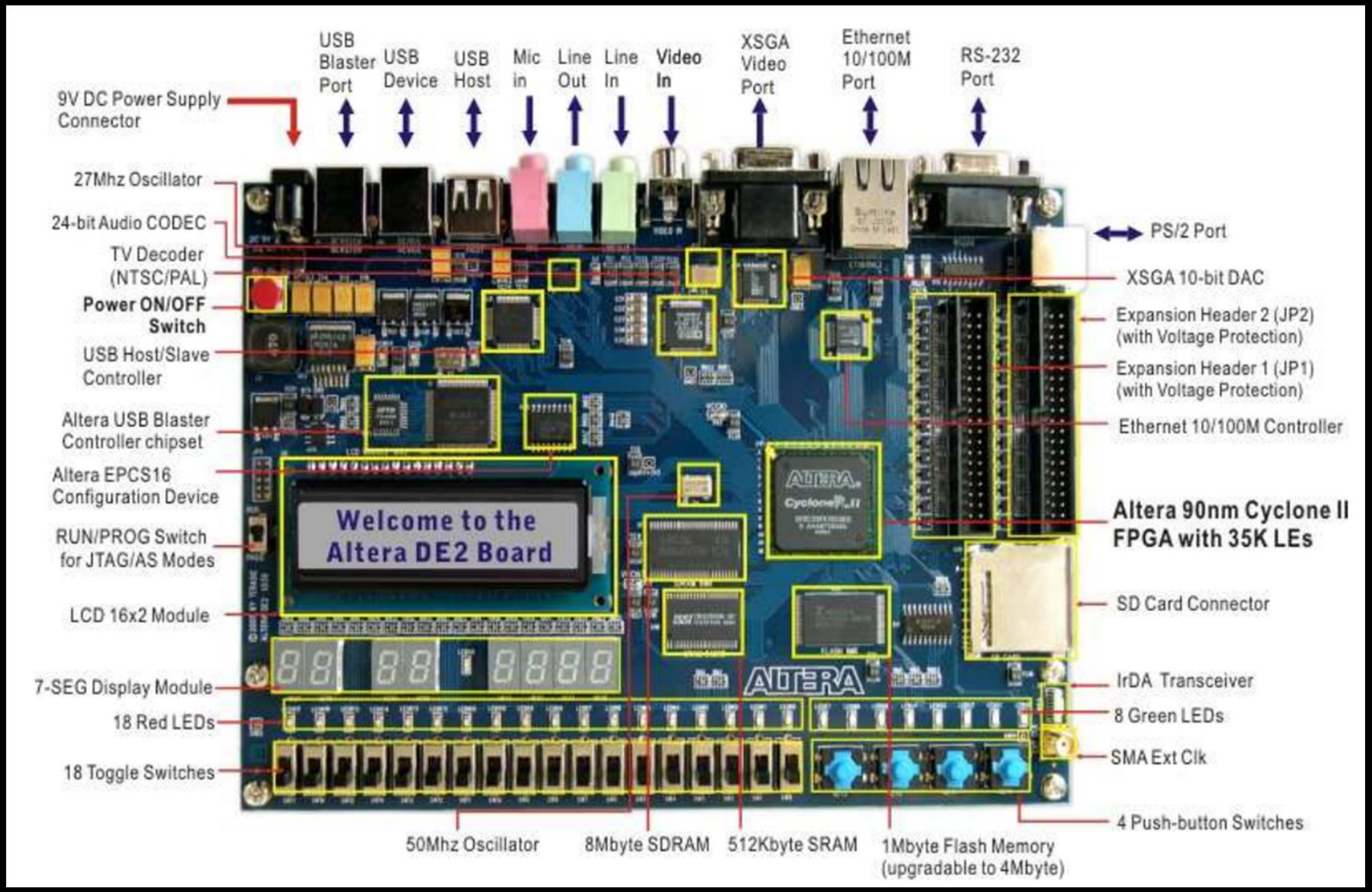

Hardware FPGA –DE2

Altera DE2-115 Development and Education Board

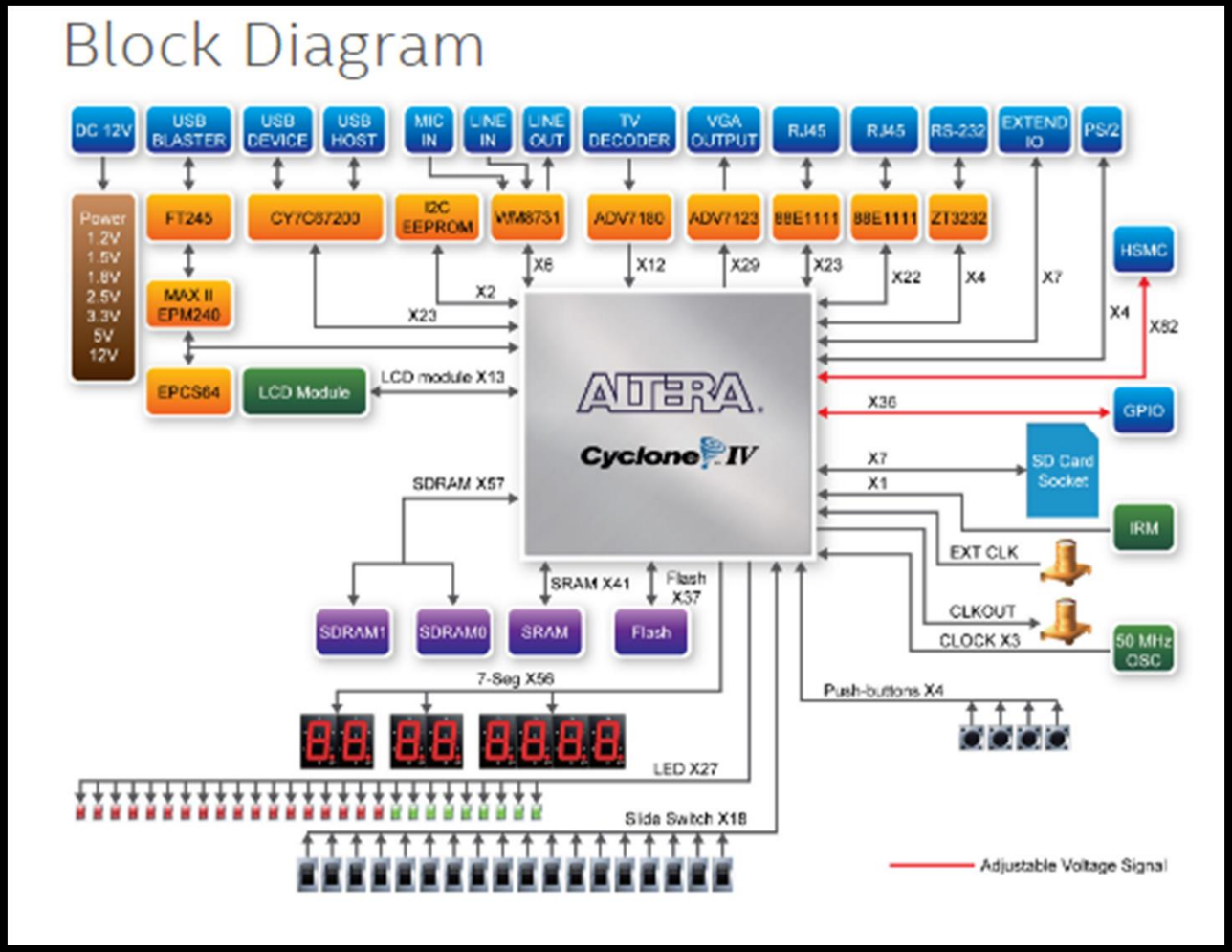

(Currency: USD)

Price: $595

Academic: $309

Buy it now

Hardware FPGA –DE2

Altera Cyclone II 2C35 FPGA with 35000 LEs

Logic Element

Hardware FPGA –DE2

Logic Element

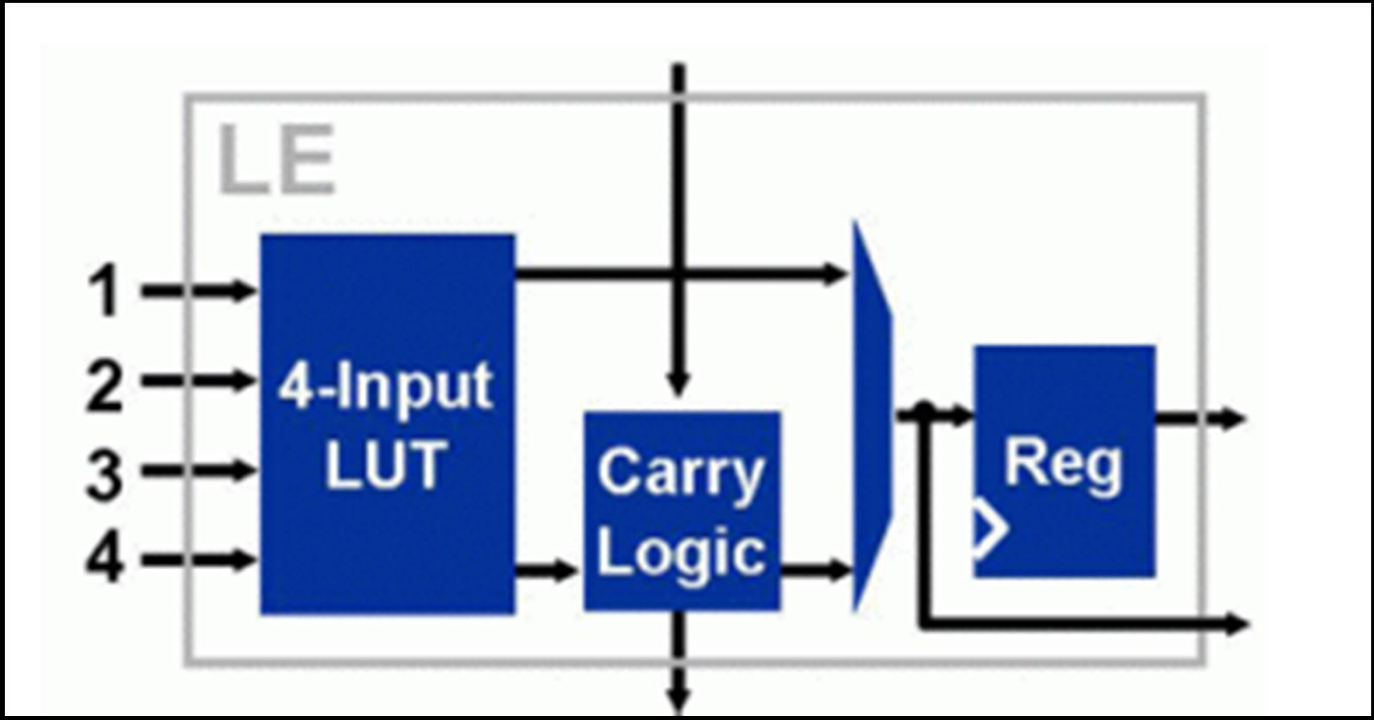

Hardware FPGA –DE2

Logic Element

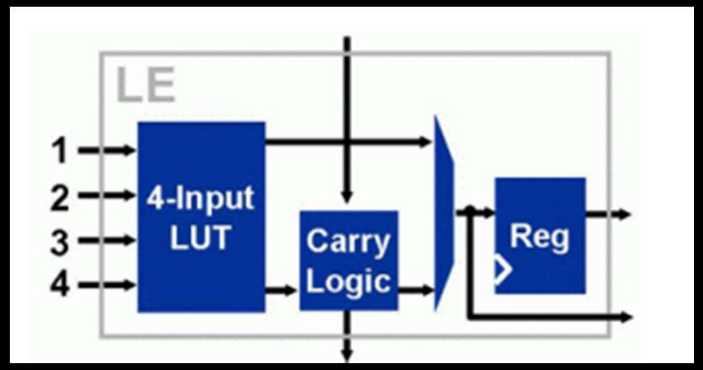

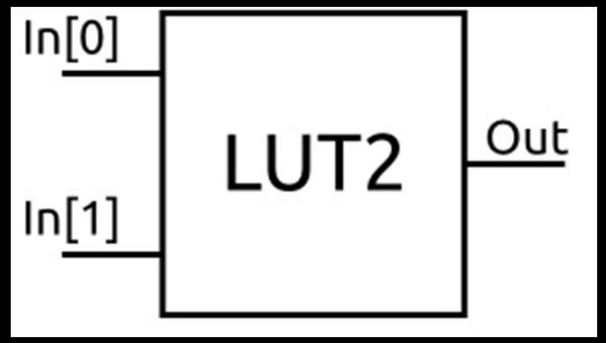

Address In ([1:0])		Output
0	0	0
0	1	1
1	0	0
1	1	0

Hardware FPGA –DE2

Logic Element

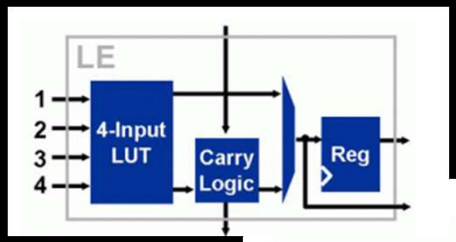

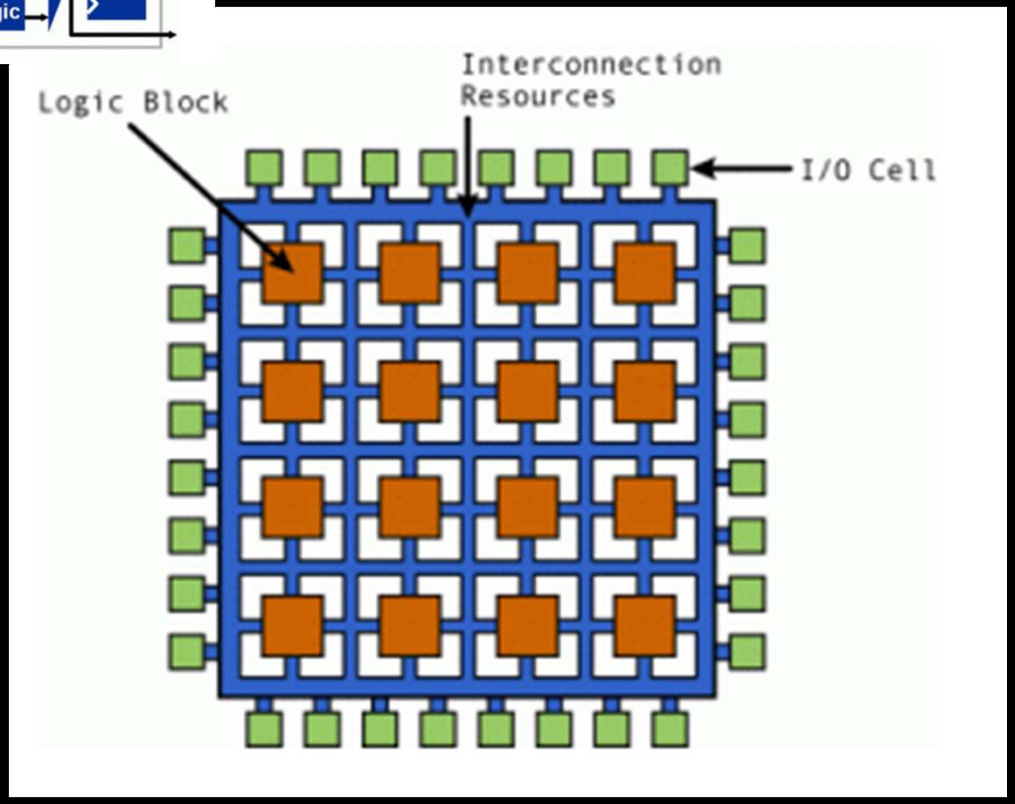

Hardware FPGA

Placa Desenvolvimento acessível

FPGA ALTERA development core board kit CYCLONE IV EP4CE EP4CE6E22C8N

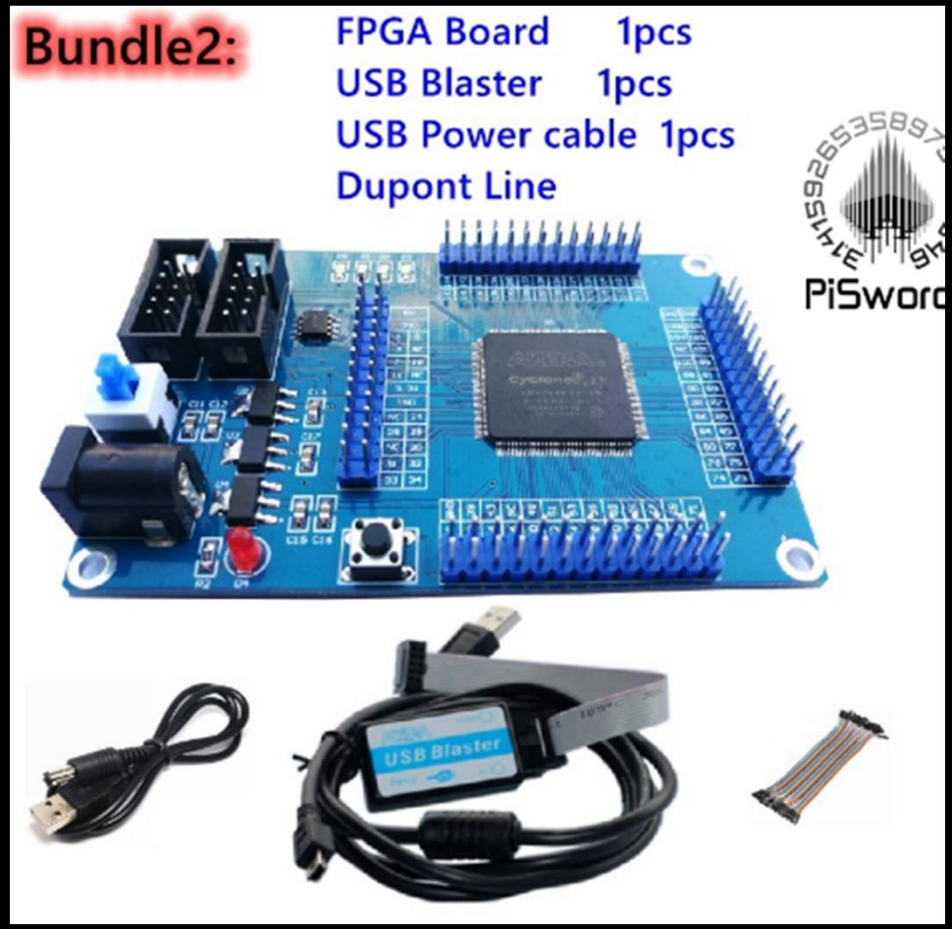

Resources	EP4CE22
Logic elements (LEs)	22,320
Embedded memory (Kbits)	594
Embedded 18 × 18 multipliers	66
General-purpose PLLs	4
Global Clock Networks	20
User I/O Banks	8
Maximum user I/O (1)	153

Preço: ~~R$ 79,74 / item~~

Preço com desconto: **R$ 75,75** / item

Processador + FPGA

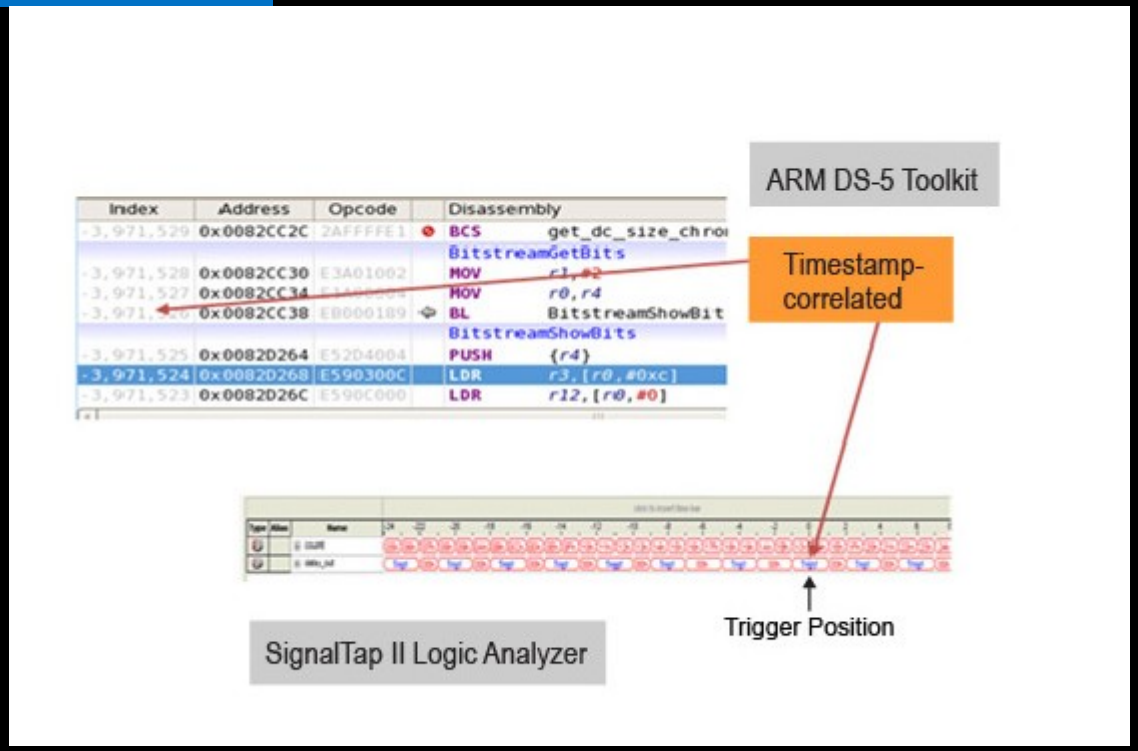

Intel FPGA

Are You New to the World of FPGAs?

Read the free ebook *FPGAs for Dummies* to increase your understanding of FPGAs or check out other resources in 'Getting Started' to learn how to use/design with FPGAs.
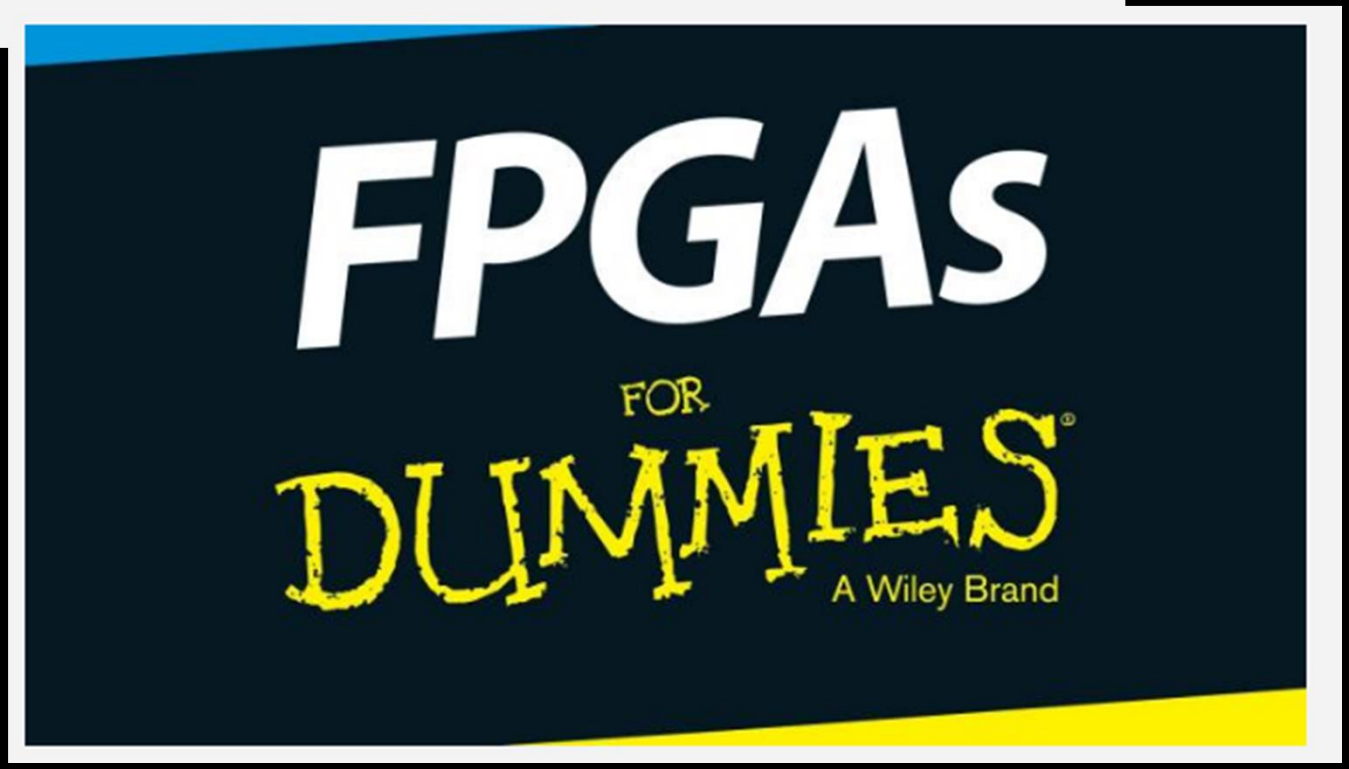
Download the free eBook